ISSN 2395-1621

Home Automation System Using Power Line Communication and Android Wi-Fi Device

#1 Omprakash Karamunge, #2 Prof. Sanjay Nipanikar

[1]omprakash.karamunge@gmail.com
[2]sanjaynipanikar@rediffmail.com

#1PG Scholar, E&TC Engineering, PVPIT Pune, Savitribai Phule Pune University, Pune, India.
#2Asst. Prof E&TC Engineering, PVPIT Pune, Savitribai Phule Pune University, Pune, India.

ABSTRACT

The main advantages with PLC (Power Line Communication) are the use of an existing infrastructure. An open source automation system for controlling electrical appliances using PLC is presented here. Control messages are sent over Wi-Fi network from a Wi-Fi device i.e. Android Smartphone to the FPGA (Field-Programmable Gate Array) which then couples the messages to the power lines. Wi-Fi module is interfaced with FPGA through UART serial link. Android smart phone and FPGA communicates over wifi using P-to-P (point to point) communication. Ubiquitous power lines are used as physical media to transmit data over 220V/50Hz signal to control appliances/equipment. The data from the FPGA is coupled onto the power lines using a PLC modem and FSK (Frequency Shift Keying) modulation technique is employed to transmit data. Each receiver unit consists of PLC modem plus microcontroller and can be connected anywhere in the power line network. The receivers have addresses assigned to them and only respond to the commands sent to them by the transmitter PLC modem. The receiver unit controls the flow of electricity to the socket. The entire system is devoid of a computer to save power and make it low cost. Use of open source hardware, PLC, FPGA at master side and micro-controller at slave side collectively reduce the cost of controlling appliances remotely.

Keywords— Power Line Communication, Field Programmable Gate Array, Frequency Shift Keying

ARTICLE INFO

Article History

Received : 18th July 2015

Received in revised form : 20th July 2015

Accepted : 24th July 2015

Published online : 27th July 2015

I. INTRODUCTION

Automation essentially involves leveraging the power of technology to reduce the dependency on human presence and decision making for any process. It leverages different electronic equipment to control different parameters of any process. In these days of energy scarcity, it is prudent to save energy in every way possible. It is paramount to make such systems as easy to use as possible so that people can use their appliances in a smarter way to save energy. It also enables people to be more energy conscious by enabling them to have a real time status of electric appliances.

Automation also helps reduce peak hour power consumption by enabling people to turn off appliances at will remotely. This facilitates a constant power supply by having varied pricing policies for different times of day and night. Aim of this project is to simplify the process of human-machine interaction through the use of a generic. The purpose of the system is to provide convenience to the user interaction system and to make things around us smarter and interactive and also to reduce power consumption and save energy. This system requires no modification to the appliances, and it works for all appliances using electricity since electricity to the socket is controlled and not the appliance directly. The number of appliances needed to be controlled can be easily increased by increasing the range of addresses of the receiver units. Also the hardware and software used to build the system are licensed under open source license, unlike

commercial systems which are proprietary in nature, thus lowering the cost of the system significantly.

With increasing amounts of electrical appliances in residential homes, power usage is becoming a larger concern. Home owners require a more convenient system to monitor power usage so they can make decisions to use power more efficiently. Since there is already a wired network in most homes, the power line mains, it is unnecessary to add additional wiring for a power monitoring system. Therefore, the mains should be used for such a power monitoring and control system, increasing the convenience for the home owner.

The design of a Wireless Home Automation system Using PLC (Power Line Communication) was undertaken because of a need for users to efficiently manage the consumption of power in their homes. Costs will be kept to a minimum by the use of existing home wiring. The PLC (Power Line Communication) over the low voltage grid has interested several researchers and utilities during the last decade. They are trying to achieve higher bit-rates and more reliable communication over the power lines.

A power line communication (PLC) system superimposes a signal on the mains. It is the usage of power lines as a transmission channel for the exchange of data [**2**]. Each PLC unit can send or receive commands and data using this communication channel. The power usage of a load is monitored by a PLC unit, and the resulting data is sent back to the home owner over the power lines. The user can then reduce the power going into the load with a dimmer circuit on the PLC unit.

PLC is a technology which uses power lines as physical media for data transmission. PLC system signals were sent and received on household and industrial 50Hz current bearing power lines. PLC offers a no new wires solution because the infrastructure has already been established. PLC modems are used for transmit-ting data at a rapid speed through a power line in a house, an office, a building, and a factory, etc. Here, the existing alternating current (AC) power wires serve as a transmission medium by which information is relayed from a transmitter or control station to one or more receivers. It is because power line is a relatively cheaper and more robust communication channel used throughout the world except wireless channel. It is used more commonly used than any other communication channel.

There are PLC SOCs available in market like IT800D, CY8CPLC10. These socs are fixed function chips and requires external host to control the communication. The interface between host and this chip is through memory array share through UART/SPI/I2C.

II. LITERATURE REVIEW STAGE

A deep and profound literature survey is backbone of any successful project. Extensively search has been carried out for past and related work in this field. Internet tool is used as source of information for carrying out this literature survey.

Karthik Shivaram and team[1]explained an open source automation system for controlling electrical appliances using power line communication in “Power Line Communication Based Automation System Using a Handheld Wi-Fi Device”, 2012 IEEE 16th International Symposium”. Control messages are sent over Wi-Fi network from a Wi-Fi device to microcontroller which then couples to power line and receiver will receive data and take appropriate action.

Mr. Wong [2] published “A phone-based remote controller for home and office automation" paper in IEEE, Feb 1994, it explained that importance of home and office automation and how to control that using phone in his.

In modern society, home and office automation become increasingly important and interesting. They not only provide better ways to transfer information within homes/offices and between homes/offices, they provide better time management too. These also improve the quality of our lives by automating some of the electrical home appliances such as light source, A/V equipment, computer, security device, etc. The paper describes a hardware-based remote controller for power point control. Users can input the control commands and their own passcodes by using local or external telephones. The paper also discusses the operational sequence of the remote controller

Debono, C.J.; Abela, K.; Implementation of a home automation system through a central FPGA controller. Published in electrotechnical conference (MELECON), 2012 16th IEEE Mediterranenan

Technology advancements have made possible the implementation of embedded systems within home appliances. This has added new capabilities and features, however, most of the time, the implementations are proprietary and networking is not always possible. Yet there is an increasing demand for smart homes, where appliances react automatically to changing environmental conditions and can be easily controlled through one common device. This paper presents a possible solution whereby the user controls devices by employing a central Field Programmable Gate Array (FPGA) controller to which the devices and sensors are interfaced. Control is communicated to the FPGA from a mobile phone through its Bluetooth interface. This results in a simple, cost effective, and flexible system, making it a good candidate for future smart home solutions.

Mr. Abhishedk Vichare, Ms. Shilpa Verma 2012. Embedded Web Server for Home Automation , International Journal of Engineering and Applications, National Conference on emerging trends in engineering and technology VNCET-30 March 12

Main aim of this paper is to describe how to connect a micro- controller to LAN or Internet and use it as a web server. This paper offers a new approach to control home appliances from a remote terminal, with an option from a local server, using the Internet. This system is accomplished by personal computers, interface cards, microcontroller, along with window-type software and microcontroller control software. The system is designed to control home appliances' on/off, to regulate their output power, and to set their usage timing. The microcontroller which is used in this project is the Philips P89C51RD2BN microcontroller.

Ali Ziya Alkar Member, IEEE and Umit Buhur. An Internet Based Wireless Home Automation System for Multifunctional Devices.

The aim of home automation is to control home devices from a central control point. In this paper, we present the design and implementation of a low cost but yet flexible and secure internet based home automation system. The communication between the devices is wireless. The protocol between the units in the design is enhanced to be suitable for most of the appliances. The system is designed to be low cost and flexible with the increasing variety of devices to be controlled.

III.PROPOSED SYATEM

By considering drawbacks & strength of literature survey the proposed Power Line Communication and android wi-fi device based home automation system is as

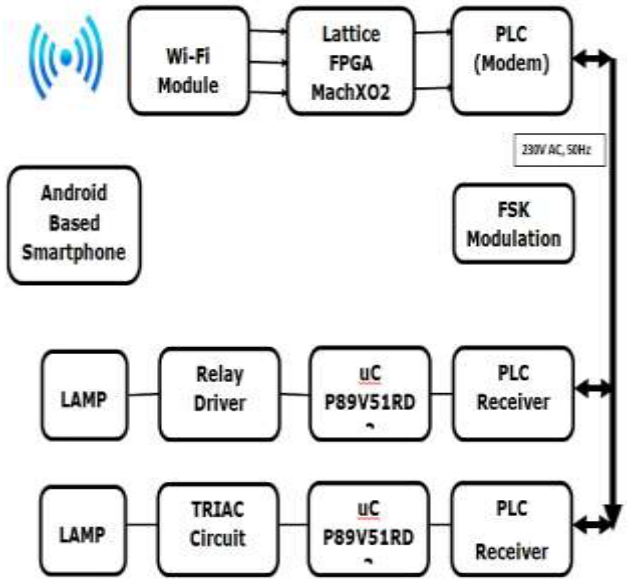

Fig 1: "Block Diagram of System"

A Wi-Fi enabled device is used as means of input. An Android based Smartphone is used for this purpose, which provides the user with a touch screen interface facilitating ease of use. A Wi-Fi network is first setup using a wireless router. The FPGA connects to the wireless router through an Wi-Fi module i.e. ESP8266. The Wi-Fi module and FPGA communicate over a Serial (UART) bus. An application on the device consists of 3 buttons and 1 slider and enables us to send messages in proprietary frame format. Protocol is used to communicate between the Android based Smartphone and the FPGA over a Wi-Fi network. When a user presses a particular button, specific messages are sent over the Wi-Fi network to the FPGA which decodes the messages. The FPGA converts these messages into simple control signals. The commands sent by the FPGA to switch ON/OFF an appliance are not sent directly to the appliance, but rather these commands are broadcasted over the power lines using a PLC transmitter. The FPGA sends data to the PLC modem using UART protocol. Each end appliance has a PLC receiver plus micro-controller combination to listen to these commands, if the commands are intended to the corresponding appliance; it switches ON/OFF the appliance or controls the appliance. This is explained in fig 3 flowchart for android device software.

The Lattice FPGA is the main controller (master) of this system; it is the main channel of communication between the slaves and the ESP8266 Wi-Fi module. The FPGA uses a two (UART) interface to communicate with the Wi-Fi module and also it uses UART interface to communicate with sunrom Power line communication module.

Protocol for communication with ESP8266 Wi-Fi module and PLC modem exists as a separate FPGA image and is programmed to the FPGA. This is explained in fig 4 flowchart for master node software.

Once the FPGA has been programmed it will start operating. In FPGA contains 8/16/32 bit soft core processor IP is programmed. Hence this FPGA acts as 8/16/32 bit controller similar to P89V51RD2 (8 bit) microcontroller. Then we need to write firmware and download it into that microcontroller. This microcontroller is used to initialize ESP8266 Wi-Fi module and PLC modem. It is used to receive command or data from Wi-Fi device and it send back acknowledgement to Wi-Fi device. It also sends command or data to slave modules on PLC modem. When the FPGA receives data from the slave, it relays it to the Wi-Fi module which then sends it to the host device. This requires the FPGA to send the data to Wi-Fi module over UART/SPI which will relay that information to the host over the Wi-Fi connection.

There are 8 switches in PCB mounted package. This switch is used to set address of Master module. Default master address is 0.

Decoupling capacitors should be placed as close as possible to the VDD pins of the device.

The microcontroller is a P89V51RD2 and it is used in slave module. It was chosen because it has a good set of peripherals that will be useful for adding functionality in the future, it has a set of high level development C++ tools for faster application creation while keeping the ability to program on a low level in 'C' and also it has a SPI, UART for communicating with a PLC modem, PWM to control duty cycle of control signal for fan speed or dimming the light application. This is explained in fig 5 flowchart for receiver node device software.

Its main function is to receive data/command from master on power line and generate control signal to switch on/off lamp. Also it generated PWM signal as per received data from master that PWM is used for dimming the light or fan speed control. Also this microcontroller communicates with PLC modem to receive/send data on power line.

The microcontroller can also decode data sent from the FPGA over power line, and It acts as per command and It send acknowledges to master.

The microcontroller has the required connections to the microcontroller's IO ports which are connected to relay driver and signal conditioning for TRIAC. It also shows the supporting circuitry including the crystal oscillator and the de-coupling capacitors.

De-coupling capacitors and should be placed close to the VDD pins.

Microcontroller oscillates at 12MHz and provides the clock for the microcontroller and the FPGA.

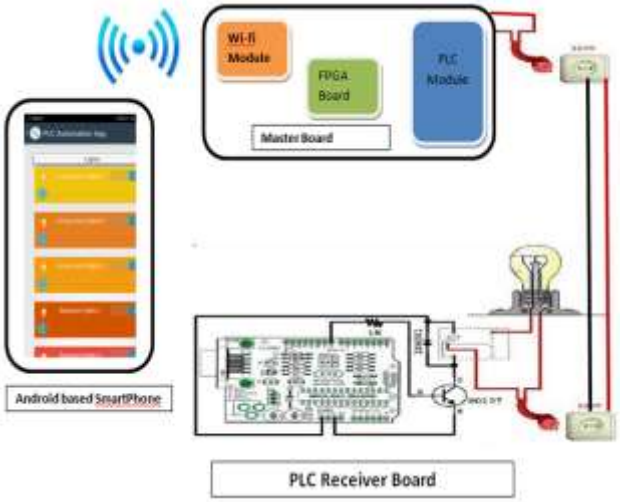

Fig 2: System setup

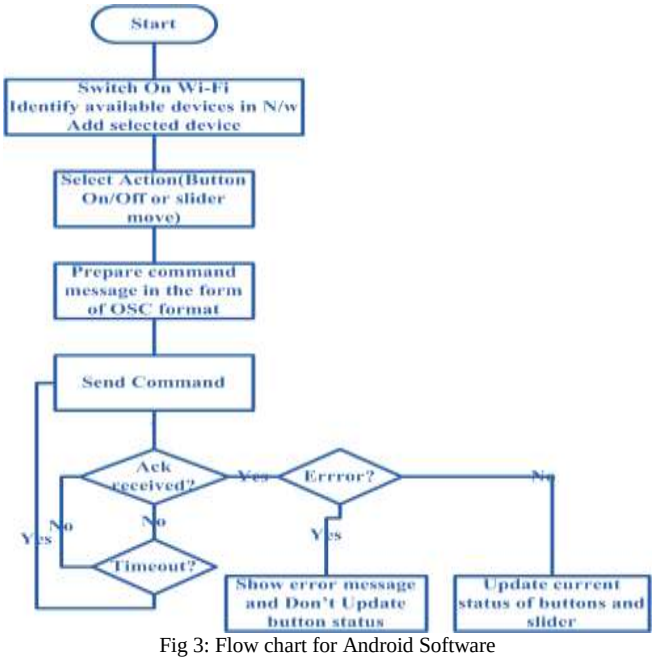

Fig 3: Flow chart for Android Software

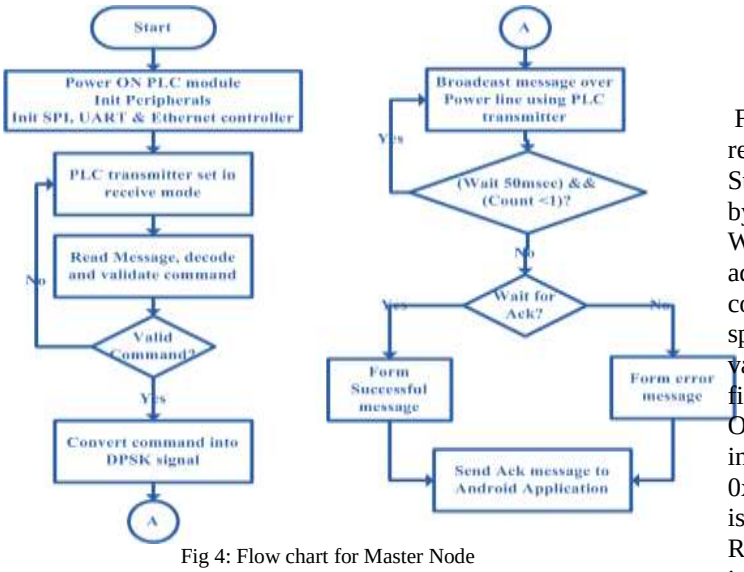

Fig 4: Flow chart for Master Node

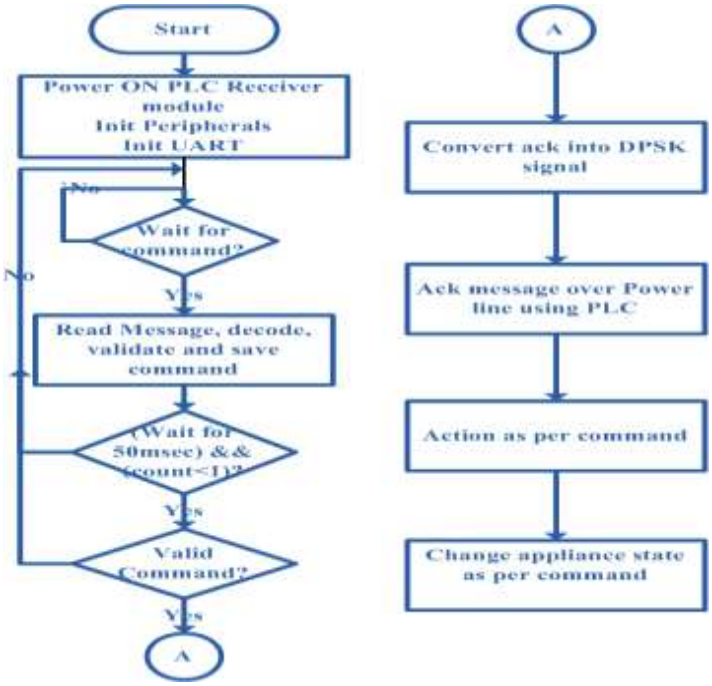

Fig 5: Flow chart for Receiver Node

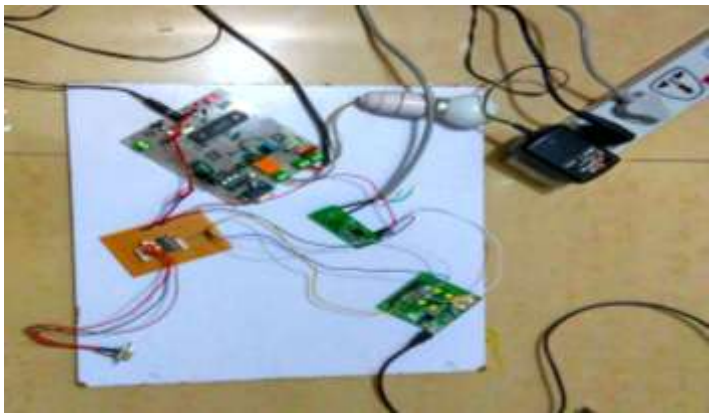

Fig 6: Working model setup

IV. RESULT AND DISCUSSION

Following table shows transmitted commands and expected result at receiver side. Protocol frame format is as follows
Start byte + Receiver Address + Command + Data + End byte

Where, **$** represent start byte, **#** represents end byte, slave address is from 1 to 255, in command field 1 indicates command for switch ON/OFF lamp and 2 indicates fan speed or lamp brightness control command. Data field varies depending on command. To switch ON off lamp, data field will be 0 to switch off lamp and it will be 1 to switch ON lamp. For fan speed and lamp brightness control 0 indicates speed/brightness will be zero i.e. in off condition. 0x64 indicates full speed fan on or with full brightness lamp is on.

Range from 0x00 to 0x64 shows PWM duty cycle. 0x0 indicates off state and 0x64 indicates full speed on state.

Start	Receiver Address	Command	Data	End	Action
$	1	1	1	#	Switch On lamp
$	1	1	0	#	Switch Off lamp
$	2	2	100	#	Switch On lamp with full brightness
$	2	2	0	#	Switch On lamp with minimum brightness
$	2	2	50	#	Switch On lamp with 50% brightness

Fig 7: Test commands and results

Above table shows transmitted commands and expected result at receiver side.
$ 0x01 0x01 0x01 # - This is the command to switch on the lamp for receiver 1
$ 0x01 0x01 0x00 # - This is the command to switch off the lamp for receiver 1
$ 0x02 0x02 0x64 # - This is the command to switch ON fan
or lamp with full speed/ brightness for receiver 2
$ 0x02 0x02 0x00 # - This is the command to switch ON fan or lamp with zero speed/brightness for receiver 2
$ 0x02 0x02 0x64 # - This is the command to switch ON fan or lamp with 50% speed/ brightness for receiver 2

V .CONCLUSIONS

a Digital Power Line technology is an exciting alternative to connecting to the internet via phone and modem. As it is emerging technology, the next few years will decide whether PLC can compete in the home automation market.
PLC offers a method of broadband access for those living in isolated areas, which have no other viable means of broadband access. Therefore, it seems plausible that when PLC will become available in rural areas, it will be a moderate success. However, this success is unlikely to be long-term, since telecommunications companies are already contemplating rolling out FTTH (Fiber to the Home) connections to all of their customers sometime in the future. Therefore, it appears that PLC will be little more than a stopgap solution. The usage of PLC over the electrical power supply networks gives an alternative for the telecommunications access area and the same we can use in Building management services.

REFERENCES

[1] Karthik Shivaram, Nikhil Rajendra, Kavi Mahesh, Balasubramanya Murthy K.N.,Padmavathy Jawahar, University of Michigan, USA; Stanford University, USA; P.E.S.Institute of Technology, Bangalore, India. Power Line Communication Based Automation System Using a Handheld Wi-Fi Device, 2012 IEEE 16th International Symposium

[2] Wong,E.M.C.,"A phone based remote controller for home automation and office automation,"Consumer Electronics,IEEE Transactions on, vol.40, no.1, pp.28,34, Feb 1994 doi: 10.1109/30.273654

[3] Debono, C.J.; Abela, K.; Implementation of a home automation system through a central FPGA controller. Published in electrotechnical conference (MELECON), 2012 16th IEEE Mediterranenan

[4] Shwehdi, M.H.Khan,"A Power Line Data Communication Interface Using spread spectrum technology in home automation," Power Delivery, IEEE Transaction on Vol.11,no.3, pp.1232,1237, Jul 1996, doi:10.1109/61.517476

[5] Mr. Abhishedk Vichare, Ms. Shilpa Verma 2012. Embedded Web Server for Home Automation , International Journal of Engineering and Applications, National Conference on emerging trends in engineering and technology VNCET-30 March 12

[6] Piyare,R;Tazil,M,"Bluetooth based automation system using cell phone," Consumer Electronics (ISCE), 2011 IEEE 15th International Symposium on, vol.,no.,pp.192,195, 14-17 June 2011, doi: 10.1109/ISCE.2011.5973811

